REVISIONS				
ECN	REV.	DESCRIPTION	DATE	APPROVED
1061	A	FIRST RELEASE	2015-05-06	XY

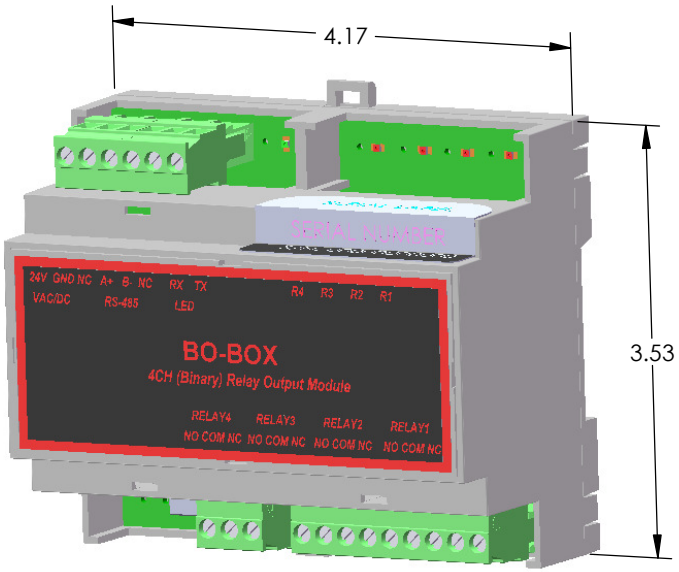

GENERAL:

The BO-Box Model is designed to allow expandability for control to the Q-Controller. Each BO-Box module has 4x pluggable relays output.

The BO-Box and other IO-Box modules connect and communicate via a RS-485 2-wire connection to the Q-Controller. The Q-Controller supports any combination of the IO Box, the BO-Box can be up to 31 modules, plus 4 onboard relays in Q-Controller, allowing a total of 128 relay output via a single Q-Controller.

All BO-Box configuration information is strored in Q-Controller, so replacement modules do not need to be configured. Each relay can be programmed with/without Normally Energized, Latched, Time delay, and can be triggered by any one or more inputs.

The BO-Box' high density packaging, removable terminal block and DIN rail mounting saves time and panel space. The module snaps easily onto standard top hat (T) profile DIN rail.

4 pluggable Relays SPDT, Dry contacts
Resistive load:
10A at 250VAC
10A at 30VDC
Inductive load:
7.5A at 250VAC
5A at 30VDC

Specification:	
Fuse	F1 : Polyswitch 750mA Polyswitch device resets after the fault is cleared and power to the circuit is removed
Power Supply	Voltage: 24VDC nominal, range 18 to 30VDC 24VAC nominal, range 15 to 24VAC 50/60HZ Note: Input Power is half-wave rectifier circuit, it can be either floating or grounded. You will damage devices if you mix half wave and full wave rectifiers on the same AC source. Use extreme caution when sharing a common AC source. Sharing a common DC source is less problematic. The BO-Box can share the same AC or DC power supply with Q-Controller, as Q-Controller is half-wave rectifier inside. Current: max. 0.75 A (fuse protected) Actual running current < 0.3A
Address	Address can be defined from 0 to 30 with the four dipswitch A0, A1, A2, A3 and A4 Factory Default address is 0 with A0= OFF, A1= OFF, A2= OFF, A3= OFF, A4= OPEN Address table in page3
Panel Indicators	TX/RX status RS-485 port TX/RX Status for Q-Controller Network Relay1 to Relay4 Status

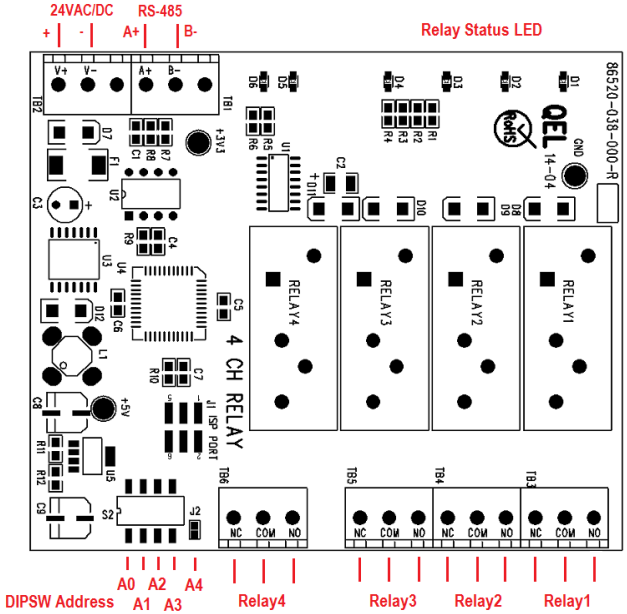

NEXT ASSY	USED ON
APPLICATION	

UNLESS OTHERWISE SPECIFIED:
DIMENSIONS ARE IN INCHES
TOLERANCES:
FRACTIONAL±
ANGULAR: MACH± BEND ±
TWO PLACE DECIMAL ±
THREE PLACE DECIMAL ±
INTERPRET GEOMETRIC TOLERANCING PER:
MATERIAL
FINISH
DO NOT SCALE DRAWING

	NAME	DATE
DRAWN	XY	15-05-06
CHECKED		
ENG APPR.		
MFG APPR.		
Q.A.		

COMMENTS:

QUATROSENSE ENVIRONMENTAL LTD.

TITLE:
BO-BOX
Installation Drawing

SIZE	DWG. NO.	REV
B	86550-005-000	A

SCALE: 1:2 | WEIGHT: | SHEET 1 OF 3

Recommend Connection for New Installations

REVISIONS				
ZONE	REV.	DESCRIPTION	DATE	APPROVED
-	-	See Sheet1	-	-

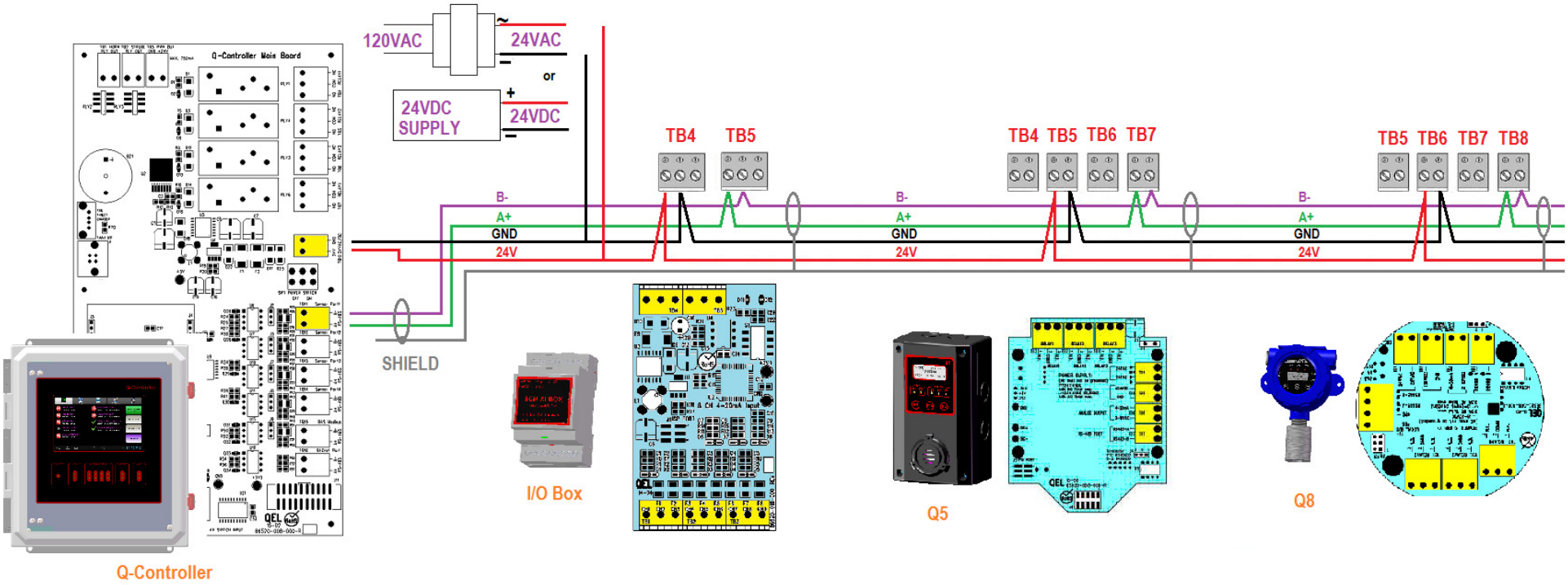

Note:
1. The power supply can be 24VAC or DC as every device uses a half-wave rectifier in the drawing
2. The power negative may be grounded or floating
3. Don't mix full wave rectifiers device with this system
4. RS-485 cable should wired from one sensor to another without tees or stub. Power cable does not matter
5. Before power up, the polarity of the 24VAC power supply should be checked carefully, reversing polarity on the network will cause the RS-485 driver chips blow up
6. The I/O Box in the drawing can be AI-Box, AO-Box, BI-Box or BO-Box

NEXT ASSY	USED ON
APPLICATION	

UNLESS OTHERWISE SPECIFIED:
DIMENSIONS ARE IN INCHES
TOLERANCES:
FRACTIONAL±
ANGULAR: MACH± BEND ±
TWO PLACE DECIMAL ±
THREE PLACE DECIMAL ±
INTERPRET GEOMETRIC TOLERANCING PER:
MATERIAL
FINISH
DO NOT SCALE DRAWING

	NAME	DATE
DRAWN		
CHECKED		
ENG APPR.		
MFG APPR.		
Q.A.		

COMMENTS:

QUATROSENSE ENVIRONMENTAL LTD

TITLE:
BO-Box
Installation Drawing

SIZE	DWG. NO.	REV
B	86550-005-000	A

SCALE: 1:4 | 1 | SHEET 2 OF 3

REVISIONS				
ZONE	REV.	DESCRIPTION	DATE	APPROVED
-	-	See Sheet1	-	-

Address Table:

Module Address	Dip Switch Setting				
	A0	A1	A2	A3	J2
0	**OFF**	**OFF**	**OFF**	**OFF**	**Open**
1	ON	OFF	OFF	OFF	Open
2	**OFF**	**ON**	**OFF**	**OFF**	**Open**
3	ON	ON	OFF	OFF	Open
4	**OFF**	**OFF**	**ON**	**OFF**	**Open**
5	ON	OFF	ON	OFF	Open
6	**OFF**	**ON**	**ON**	**OFF**	**Open**
7	ON	ON	ON	OFF	Open
8	**OFF**	**OFF**	**OFF**	**ON**	**Open**
9	ON	OFF	OFF	ON	Open
10	**OFF**	**ON**	**OFF**	**ON**	**Open**
11	ON	ON	OFF	ON	Open
12	**OFF**	**OFF**	**ON**	**ON**	**Open**
13	ON	OFF	ON	ON	Open
14	**OFF**	**ON**	**ON**	**ON**	**Open**
15	ON	ON	ON	ON	Open
16	OFF	OFF	OFF	OFF	Closed
17	ON	OFF	OFF	OFF	Closed
18	OFF	ON	OFF	OFF	Closed
19	ON	ON	OFF	OFF	Closed
20	OFF	OFF	ON	OFF	Closed
21	ON	OFF	ON	OFF	Closed
22	OFF	ON	ON	OFF	Closed
23	ON	ON	ON	OFF	Closed
24	OFF	OFF	OFF	ON	Closed
25	ON	OFF	OFF	ON	Closed
26	OFF	ON	OFF	ON	Closed
27	ON	ON	OFF	ON	Closed
28	OFF	OFF	ON	ON	Closed
29	ON	OFF	ON	ON	Closed
30	OFF	ON	ON	ON	Closed

NEXT ASSY	USED ON
APPLICATION	

UNLESS OTHERWISE SPECIFIED:

DIMENSIONS ARE IN INCHES
TOLERANCES:
FRACTIONAL ±
ANGULAR: MACH ± BEND ±
TWO PLACE DECIMAL ±
THREE PLACE DECIMAL ±

INTERPRET GEOMETRIC TOLERANCING PER:

MATERIAL

FINISH

DO NOT SCALE DRAWING

	NAME	DATE
DRAWN		
CHECKED		
ENG APPR.		
MFG APPR.		
Q.A.		

COMMENTS:

QUATROSENSE ENVIRONMENTAL LTD

TITLE:

BO-BOX
Installation Drawing

SIZE	DWG. NO.	REV
B	86550-005-000	A

SCALE: 1:4 | WEIGHT: | SHEET 3 OF 3